User Manual



Battery vision 2.1

To prevent damage to the product caused by improper use, please carefully read this manual before operation.

Content

1 Notes on This Manual 1
2 Product Introduction 4
2.1 Battery Appearance 5
2.2 Battery Terminals 7
2.3 Battery Function 8
2.4 Technical Specifications 10
3 Safety Precautions 11
3.1 Personnel Safety 11
3.2 Handling 12
3.3 Installation 12
3.4 Mounting 13
3.5 Response to Emergency Situations 14
4 Storage Requirement 15
5 Installation 16
5.1 Items in the Package 16
5.2 Clearance 17
5.3 Tools 18
5.4 Installation Steps 19
5.5 Wiring Steps 22
5.6 Disassembly Steps 27
6 System Operation 28
6.1 System Start Up 28
6.2 System Shut Down 28
6.3 System Black Start 28
6.4 Monitoring Methods 29
7Maintenance Guide 30
7.1 Routine Maintenance 30
7.2 Troubleshooting 31
7.3 FAQ 33
8 Product Introduction 35
8.1 Battery vision 2.1 Specifications 35
9 Contact Us 38

1 Notes on This Manual

The document describes the installation, commissioning, maintenance and troubleshooting of the following high voltage battery listed below.

Battery vision two 2.1

Battery vision three 2.1

Battery vision four 2.1

Battery vision five 2.1

Battery vision six 2.1

Model	Battery vision two 2.1	Battery vision three 2.1	Battery vision four 2.1	Battery vision five 2.1	Battery vision six 2.1
Battery vision top pack 2.1 (4.6 kWh)	1	1	1	1	1
Battery vision pack 2.1 (4.6 kWh)	1	2	3	4	5

The battery chemistry of these products is Lithium Iron Phosphate. This manual is designed for qualified personnel only. The tasks described in this document should be performed by authorized and qualified technicians only.

After Installation the Installer must explain the user manual to the end user.

All warranty-related information is subject to the product warranty documentation.

Symbols Used

The following symbols are used in the manual to highlight information in order to ensure the safety of the user's person and property when using the product, and to use the product more efficiently and optimally. The following symbols may appear in this manual, and the meanings they represent are listed below:

⚠ Danger!

"Danger" indicates a hazardous situation which, if not avoided, will result in death or serious injury.

⚠ Warning!

"Warning" indicates a hazardous situation which, if not avoided, could result in minor or moderate injury.

Note!

"Note" provides important tips and guidance.

Symbols	Explanation
	CE mark. The battery complies with the relevant EU directives.
	RCM mark.
	The battery meets the requirements of the UK product safety certification.
	Danger of high voltages. Danger to life due to high voltages in the battery!
	Do not place nor install near flammable or explosive materials.
	Install the product out of reach of children.
	Prohibit the use of water to extinguish fires.
	Prohibition of private maintenance.
	Prohibit Connector Reversal.

	Read the manual before performing any operations on the battery.
	Do not dispose of the product with household wastes.
	Disconnect the equipment before carrying out maintenance or repair.
	Observe precautions for handling electrostatic discharge sensitive devices.
	PE conductor terminal.
	Caution, risk of electric shock, energy storage timed discharge.

2 Product Introduction

Battery vision pack 2.1 (4.6 kWh) is the battery module, and Battery vision top pack 2.1 (4.6 kWh) includes system controller and battery module. Ensure that each system has only 1 Battery vision top pack 2.1 (4.6 kWh) and a maximum of 5 Battery vision pack 2.1 (4.6 kWh).

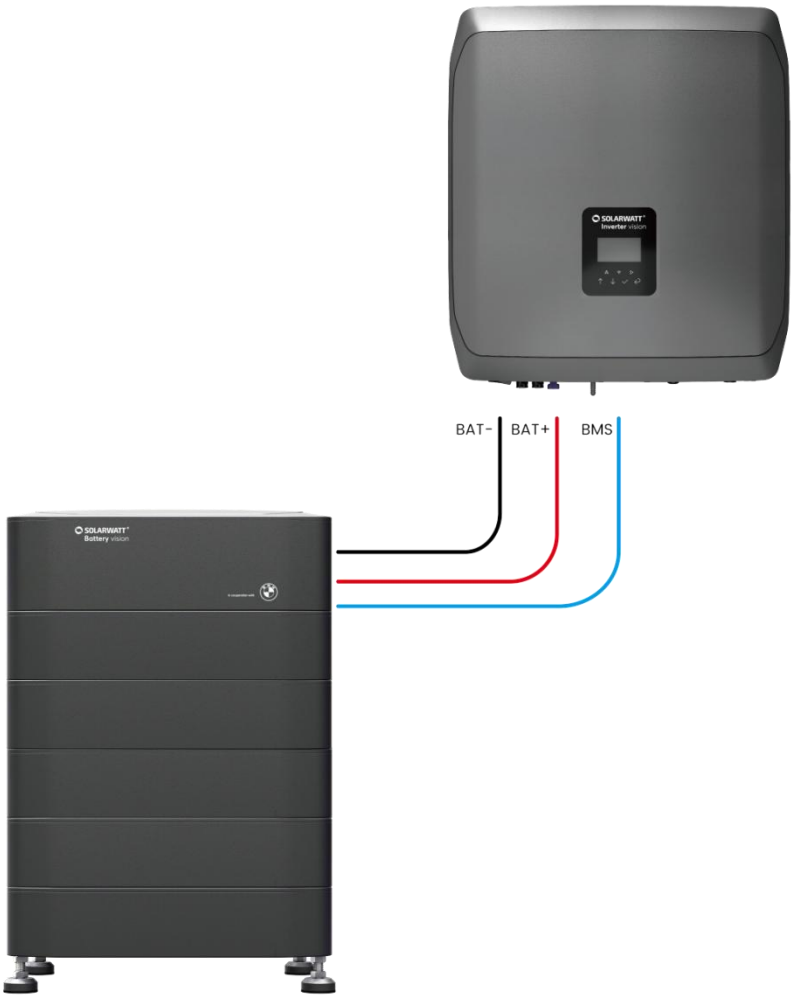

System Diagram

Note!

The figure is for reference only, the actual configuration will depend on the specific project.

2.1 Battery Appearance

The battery system contains the following Interface to allow it to connect and operate efficiently.

Battery vision pack 2.1 (4.6 kWh) appearance:

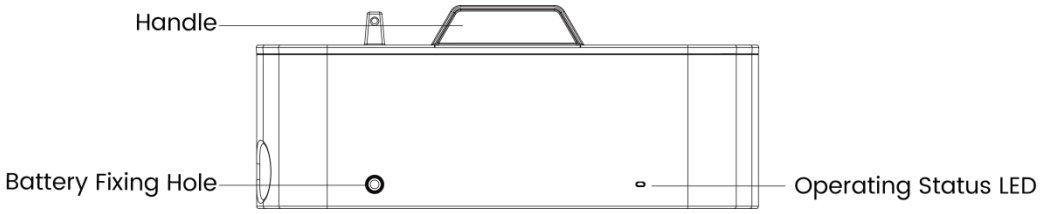

Battery vision top pack 2.1 (4.6 kWh) appearance:

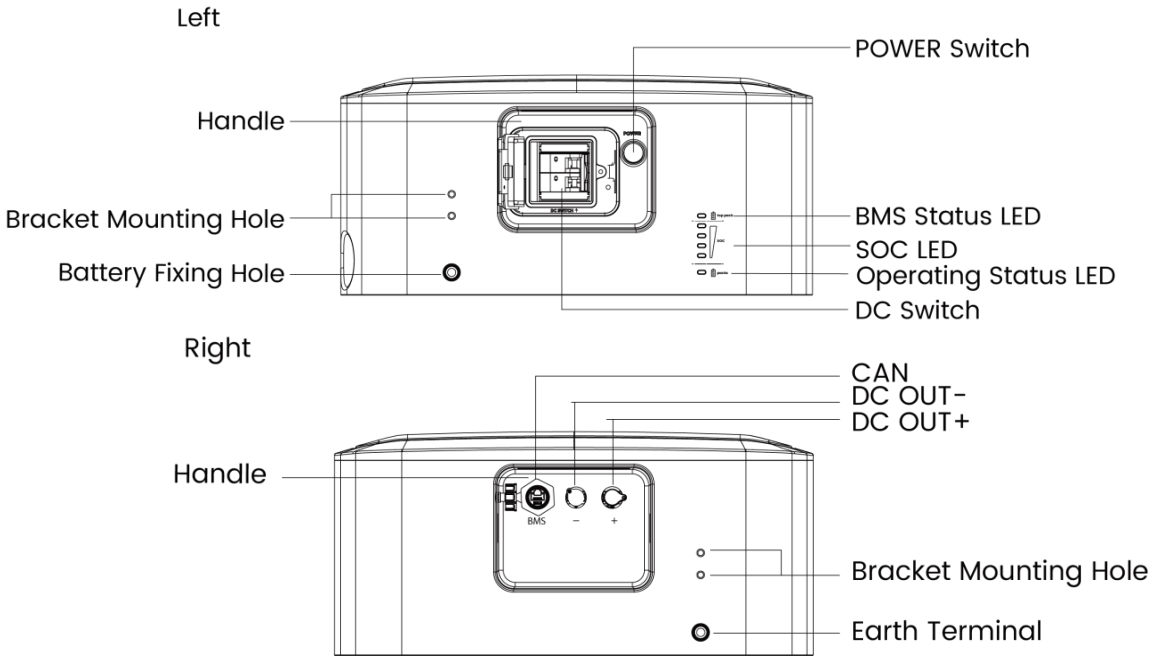

DC Switch

Power switch, battery charge and discharge circuit switch.

DC Out +

Connect BAT+ of inverter.

DC Out -

Connect BAT- of inverter.

Power Switch

System power on switch, press and hold switch for 3 seconds, and then release the switch, the system starts to work.

BMS Status LED and SOC LED

LED display specific alarm information and battery system power.

Operating Status LED

This LED is used to indicate if the battery is operating effectively. A green light on this LED means the battery is ON and operating normally. If the battery is operating failure, a red light on this LED means the battery is operating abnormally.

2.2 Battery Terminals

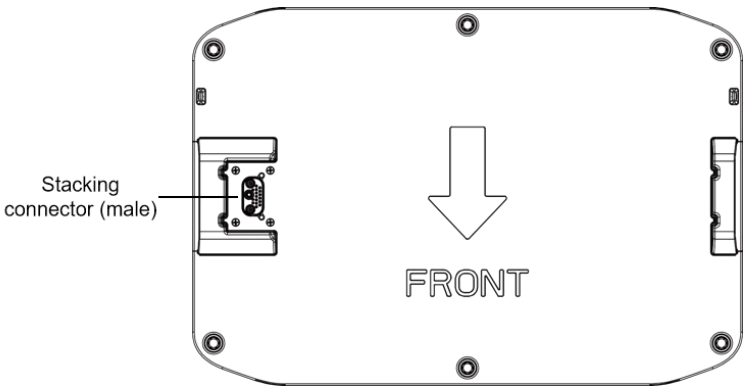

Top View

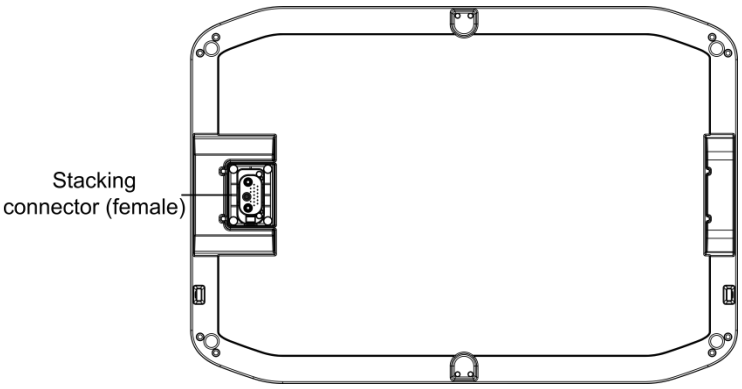

Bottom View

The battery stacking connectors (top and bottom) meet IP2X requirements, and the connector on each side is voltage-free.

- Do not touch the connectors on the top and bottom of the battery module when removing it.
- This equipment complies with the test requirements of SA TS5398. The measured arc flash energy is less than 0.1 cal/cm².

Note!

The figure shows the Battery vision pack 2.1 (4.6 kWh) module. The Battery vision top pack 2.1 (4.6 kWh) module has the stacking connector (female) on its bottom side.

2.3 Battery Function

2.3.1 Battery Protection Function

The batteries have been fitted with multiple protection systems to ensure the safe operation of the system. Some of the protection system includes:

- Inverter interface protection: Over voltage, Over current, External Short Circuit, Reverse Polarity, Ground Fault, Over Temp, In rush current.
- Battery Protection: Internal Short Circuit, Over voltage, over current, over temp, Under voltage.

2.3.2 Fire Protection Function

Despite the extremely stable chemical properties of lithium iron phosphate batteries and the multiple protections, each battery unit is equipped with a fire protection module to further ensure the safety and reliability of SOLARWATT batteries. This innovative module utilizes a new type of aerosol fire extinguishing device with features such as pressure-free storage, no maintenance required, high extinguishing efficiency, non-toxic and harmless characteristics.

Fire Extinguishing Mechanism

The fire extinguishing mechanisms of common agents mainly include isolation, smothering, cooling, and chemical suppression, with different agents exhibiting varying mechanisms. The fire extinguishing mechanism of thermal aerosols involves two main mechanisms: the cooling effect from endothermic decomposition and the chemical suppression effects in both gas and solid phases, which work synergistically. Additionally, the gaseous components in the products of the aerosol extinguishing agent also play a supportive role.

Cooling Fire Extinguishing Effect from Endothermic Decomposition

The cooling effect of thermal aerosol extinguishing agents is primarily due to the endothermic decomposition of metal oxides and carbonates. When a fire occurs, the solid particles in the aerosol rapidly absorb heat from the fire source, resulting in a decrease in flame temperature. This reduction minimizes the heat radiating to the burning surface and lowers the energy required to dissociate vaporized combustible materials into free radicals. As a result, the combustion reaction is effectively suppressed.

Gas Phase Chemical Suppression Effect

Under thermal conditions, vaporized metal ions, such as strontium (Sr), potassium (K), and magnesium(Mg), exist as vapors and participate in multiple chain reactions with active combustion radicals including hydrogen (H·), hydroxyl (·OH), and oxygen (O·). For example:

$Sr+2\bullet OH \rightarrow Sr(OH)_2$

$Sr+O\bullet \rightarrow SrO$

$Sr(OH)_2+2H\bullet \rightarrow Sr+2H_2O$

Through continuous action, this process consumes active combustion groups, significantly reducing their concentration and effectively suppressing combustion.

Solid Phase Chemical Suppression Effect

The solid particles in thermal aerosol extinguishing agents can adsorb intermediates such as • OH, H • , and O • from chain reactions, catalyzing their recombination into stable molecules. This interrupts the essential branching chain reactions in the combustion process. For example:

K_2O (s)+2H (g)→2KOH (s) KOH (s)+OH (g)→KO (s)+H_2O (g)

K_2O (s)+O (g)→2KO(s) KO(s)+H(g)→KOH

2.4 Technical Specifications

Activation method: Thermal activation

Thermal activation temperature: ≥ 170℃

Discharge time: ≤ 5 seconds

⚠ Danger!

Please contact SOLARWATT for immediate replacement if the fire protection module is activated.

Non-professionals should not disassemble the battery without authorization.

Do not touch the device until the casing has cooled after the internal fire extinguisher has been activated to prevent burns.

For further assistance, please contact an authorized personnel or SOLARWATT for further instructions.

3 Safety Precautions

3.1 Personnel Safety

Any work on the batteries should be handled by purchaser approved installer and hence it is understood that the purchaser approved installer should familiarize themselves with the contents of this manual before any maintenance or installation is carried out on the system.

⚠ Danger!

Operating Requirements

- High voltage exists inside the equipment. Unauthorized removal of necessary protective measures, improper use, and improper installation and operation may cause serious safety hazards, shock hazards, or equipment damage, and the resulting damage to the equipment is not covered by the warranty.
- Do not energize the equipment without completing the installation or without professional confirmation, and strictly prohibit operation with electricity.
- Do not open or access internal components of the battery system. Prevent both intentional and accidental contact with internal parts.

⚠ Warning!

Operating Requirements

- Always use special insulated tools for wiring operations. Direct contact or contact with other conductors or indirect contact with the power supply equipment through wet objects is prohibited.
- During operation of the equipment, the enclosure temperature is high and there is a risk of burns. Before touching any part of the battery, make sure that the equipment and its surfaces are at a contact-safe temperature and voltage before proceeding.

Note!

Personnel Requirements

- All operations, including transportation, installation, start-up and maintenance, must be performed by qualified and trained personnel.

3.2 Handling

- Do not expose battery to open flame.
- Store in a cool and dry place with ample ventilation.
- Do not store the battery near water sources.
- Store the battery on a flat surface.
- Recommend to store the battery out of reach of children and animals.
- Do not damage the unit by dropping, deforming, impacting, cutting or penetrating with a sharp object. It may cause leakage of electrolyte or fire.
- Do not touch any liquid spilled from the battery. There is a risk of electric shock or damage to skin.
- Always handle the battery wearing the insulated gloves.
- Do not step on the battery or place any foreign objects on it. This can result in damage.
- Do not charge or discharge damaged battery.

Warning: Do not use the battery if it has been dropped or appears compromised.

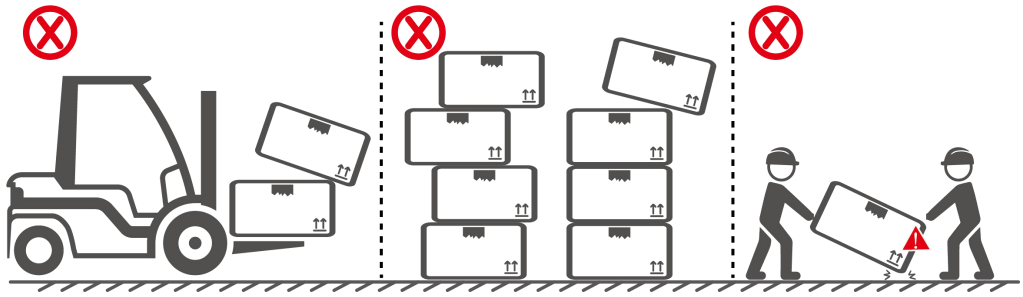

3.3 Installation

- Do not exceed the battery voltage rating of the inverter.
- Do not connect the battery to any incompatible inverter.
- Do not open the battery to repair or disassemble. Only SOLARWATT is allowed to carry out any such repairs.
- In case of fire, use only dry powder fire extinguisher. Liquid extinguishers should not be used.
- Do not use battery in high static environment where the protection device might be damaged.
- Do not install with other batteries or cells.
- Please ensure on installation site that the deviation of voltages between new batteries and every single present battery is less than 0.5V.
- Recommend to check the new batteries mounted on-site comply to the warranty scope or have ever been re-charged within 5 months; on top of that, please make sure the SOC of present battery system onsite is 50%±5%.

3.4 Mounting

Make sure the installation site meets the following conditions:

- Keep the installation area away from high-temperature sources, flammable or explosive materials, and other potential explosion hazards such as gas valves, LPG cylinders, heat pumps, firewood stacks, etc.
- The installation area must be completely waterproof, with a hard, level floor, and the wall should not have noticeable inclined angle.
- Maintain low and stable humidity with good ventilation; dust and dirt within the installation area must be minimized.
- Position the installation area away from television antennas or antenna cables to avoid lightning strikes and electromagnetic interference.
- Avoid the presence of flammable debris around the battery, such as cotton, fabric, haystacks, etc., which may be ignited by sparks and then lead the fire source to the battery, thus causing the battery to burn.
- Avoid the presence of hot or flammable objects around the battery, such as hydraulic bottles (natural gas, oxygen, etc.), heat pumps and so on.

Outdoor Installation

- The ingress protection rating for this product is IP65 and it is therefore suitable for outdoor use. Locations fully exposed to precipitation and/or extended periods of exposure to direct sunlight should, where possible, be avoided. A location where there is some direct exposure to the elements, or where complete protection cannot be achieved, are permissible and will not impact upon warranty claims providing reasonable measures have been taken. For more clarification, please contact your local SOLARWATT service team.

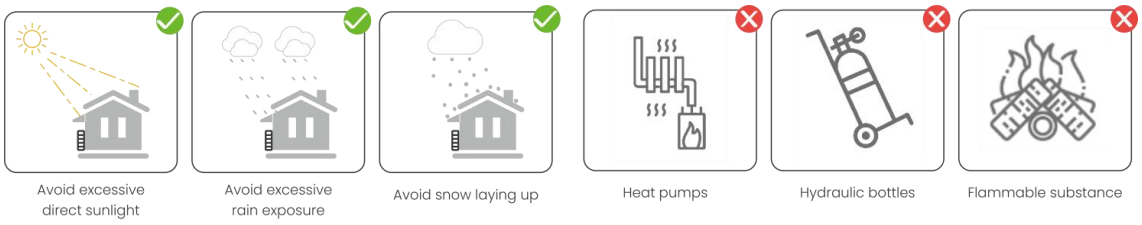

Note!

The figure is for reference only. Installation at locations with eaves is not mandatory.

3.5 Response to Emergency Situations

The batteries comprise of multiple batteries connected in series. It is designed to prevent hazards or failures. However, SOLARWATT cannot guarantee their absolute safety.

Under exposure to the internal materials of the battery the following recommendations should be carried out by the user.

- If there has been inhalation, please leave the contaminated area immediately and seek medical attention.
- If there has been contact with eyes, rinse the eyes with running water for 15 minutes and seek medical attention immediately.
- If there has been contact with the skin, wash the contacted area with soap thoroughly and seek medical attention immediately.
- If there has been ingestion, induce vomiting and seek medical attention.

Fire Situation

In situations where the battery is on fire, if it is safe to do so, disconnect the battery pack by turn off the circuit breaker to shut off the power to the system. Use dry powder fire extinguisher for the battery and other parts of the system.

Under any fire situation, please evacuate the people from the building immediately before trying to extinguish it.

Water Situation

This product features dust protection and is resistant to powerful water jets, but it is not designed to be submerged. Hence care should be taken not to get it wet. If you find the battery completely or partially submerged in water do not try to open. Contact an authorized personnel or SOLARWATT for further instructions.

4Storage Requirement

- It is recommended that the battery storage time is not more than 6 months.
- For the first installation, the interval among manufacture dates of battery modules shall not exceed 3 months.
- Regularly check whether the service environment of the battery meets the requirements, and the installation position should be far away from the heat source.
- The battery module should be stored in an environment with a temperature range between -10℃~ +50℃, and charged regularly according to the table below with no more than 0.5 C(A C-rate is a measure of the rate at which a battery is charged or discharged relative to its rated capacity.) to the SOC of 50% after a long time of storage.

Storage Environment Temperature	Relative Humidity of the Storage Environment	Storage Time	SOC
Below -20℃	/	Not allowed	/
-20~0℃	10%~90%	≤ 1 months	20%≤SOC≤50%
0~35℃	10%~90%	≤ 6 months	20%≤SOC≤50%
35~55℃	10%~90%	≤ 1 months	20%≤SOC≤50%
Above 55℃	/	Not allowed	/

Note!

If the battery is stored over one year,5%- 8% of the capacity may lose irreversibly.

- Inspection shall be conducted annually after installation. Check the power connectors, grounding points, power cables and fasteners to ensure no looseness, damage or corrosion at all connection points. Also inspect the installation environment for dust, water ingress, pest infestation and other hazards.

5 Installation

5.1 Items in the Package

Note!

Please check if following items are including with the package. After unpacking, please check the product for damages and missing parts.

For Battery vision pack 2.1 (4.6 kWh):

A



Mounting screw pack

For Battery vision top pack 2.1 (4.6 kWh) :

B



Mounting screw pack

C

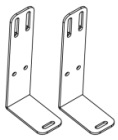

Fixing bracket*2

D



Footstand

E



Communication cable (BMS-inverter)

F



Grounding cable

G

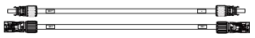

DC output cable

H



Installation guide

I



Expansion tube*2 & Expansion screw*2

J

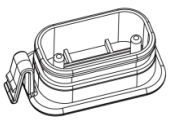

Waterproof cover

K



Loosening tool

L

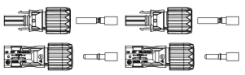

Terminal PV*2

M

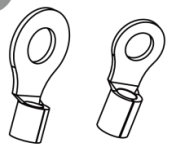

OT Terminal ϕ5&ϕ6

5.2 Clearance

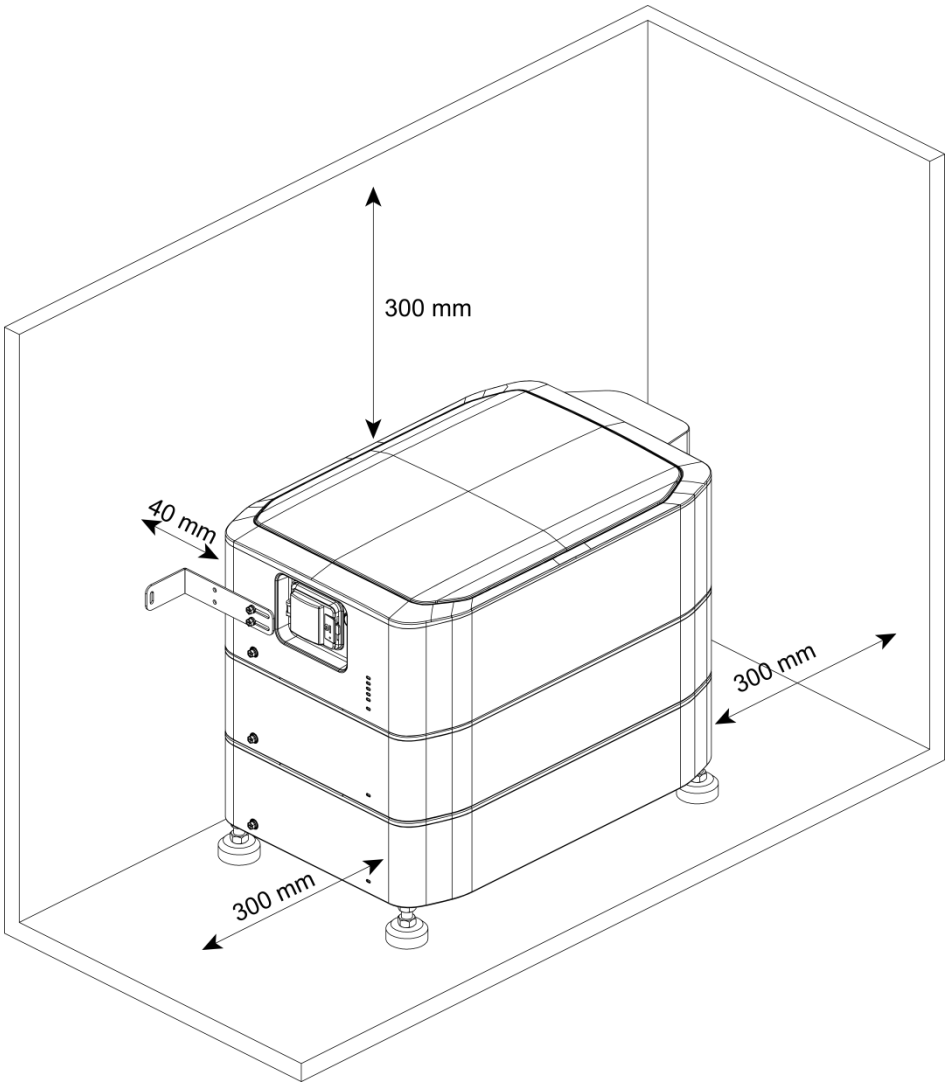

Note!

- The battery system can be installed indoors or outdoors.
- To ensure proper heat dissipation of the batteries, a reasonable clearance must be left around it (see the figure above for the specific distance).
- Installation clearance requirements shall comply with local regulations.
- Make sure that the battery module is always exposed to the ambient air. The battery module is cooled by natural convection. If the battery module is entirely or partially covered or shielded, it may cause the battery module to stop operating.
- The safety clearance for equipment installation must comply with local regulations.
- For indoor installation scenarios, the installation area must be no less than 10 m².
- The battery system must be kept at least 2 meters away from heat sources.

5.3 Tools

The following tools will be required to install Battery vision top pack 2.1 (4.6 kWh) and Battery vision pack 2.1 (4.6 kWh).



6mm Magnetic Phillips Screwdriver



Crimpers



Safety Shoes



Multimeter



Safety Gloves



Safety Glasses



Plier

Cable Ties



Hammer Drill @φ8mm



Spirit Level



Tape



Marker

5.4 Installation Steps

⚠ Warning!

- Make sure that the inverter and battery is completely turned off before commencing installation.
- Do not connect different battery types together.

Procedures		
Step 1	Install a Battery vision pack 2.1 (4.6 kWh) with four footstand (Item D) and place it on the ground and adjust it to the level. After installing the footstand, use a track level bar to confirm the level.	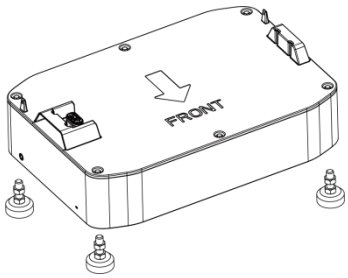
Step 2	Place the battery 40mm against the wall. Note: Please make sure the Operating Status LED is on your left hand-side when you facing the battery model.	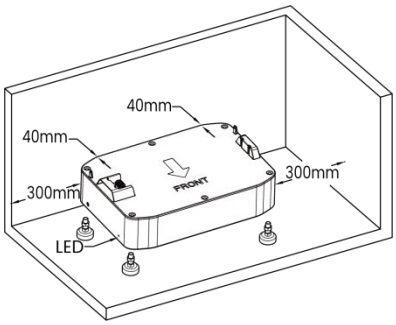
Step 3	Stack the batteries one by one.	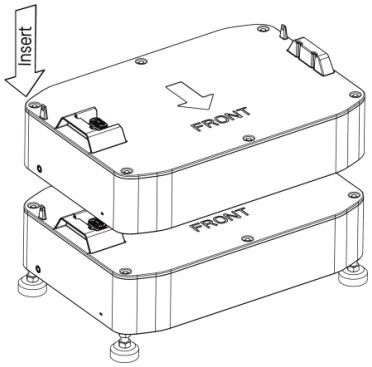
Step 4	Place the two fixing brackets (Item C) close to the wall and install them on both sides of the Battery vision top pack 2.1 (4.6 kWh) .	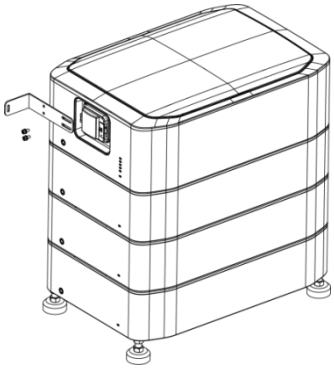

Step 5	Mark the wall through the bracket hole.	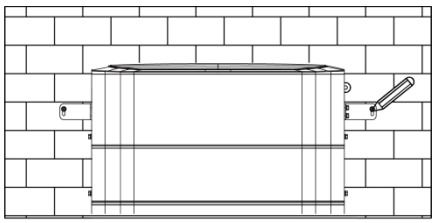
Step 6	Punch after removing the Battery vision top pack 2.1 (4.6 kWh) . Drill holes with electric drill, make sure the holes are at least 50mm deep, and then tighten the expansion tubes (Item I).	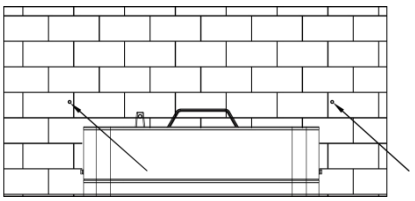
Step 7	After stacking Battery vision top pack 2.1 (4.6 kWh) again, fix the Battery vision top pack 2.1 (4.6 kWh) on the wall.	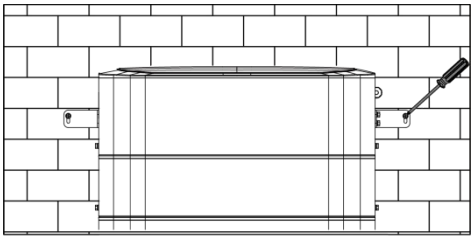
Step 8	Fix the mounting screws on both sides of the battery. Insert the waterproof cover(Item J) into the bottom of the battery and lock it in place with the clip, the installation is over.	
	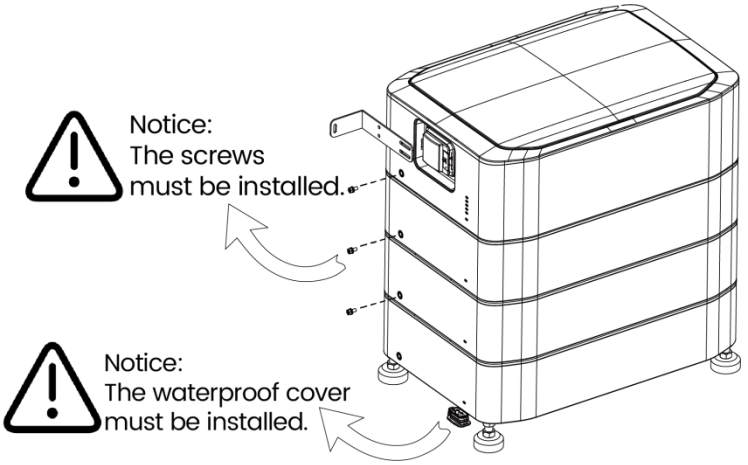	

Note!

Please make sure each system including 1 Battery vision top pack 2.1 (4.6 kWh) and a maximum of 5 Battery vision pack 2.1 (4.6 kWh).

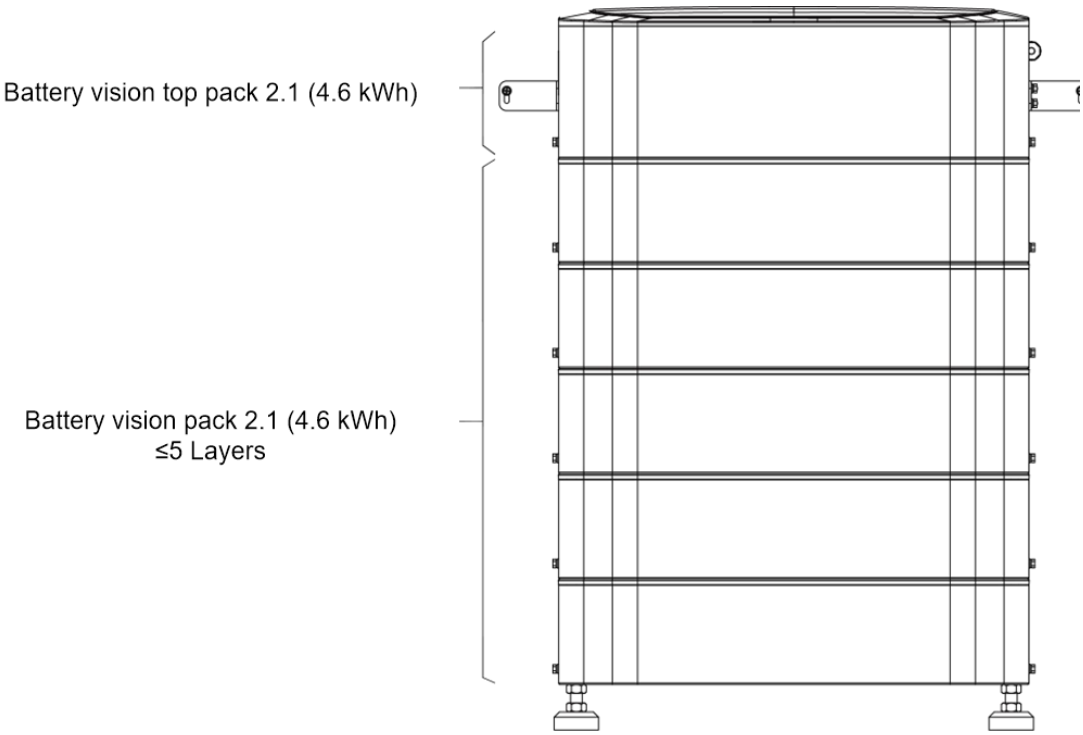

⚠ Warning!

When used with an inverter, the battery system voltage must meet the inverter battery port voltage range.

5.5 Wiring Steps

⚠ Warning!

Please use the side labeled BAT to connect to the battery and the side labeled INV to connect to the inverter.

Communication Cable Installation Procedure		
Step 1	Open the tail lock wire nut.	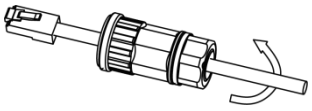
Step 2	Plug communication cable RJ45 into the battery BMS port.	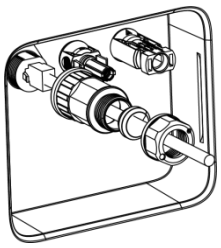
Step 3	Use an open-end spanner to lock the body onto the RJ45 board end connector; torque: 1.2±0.2N·m.	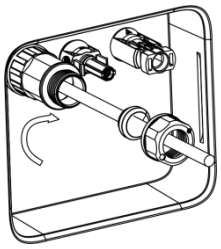
Step 4	Install the sealing plug into the main body.	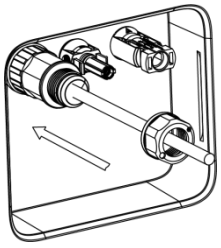
Step 5	Use an open-end spanner to lock the thread locking nut onto the main body.	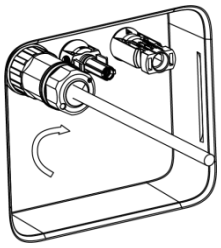

Step 6	Insert the cable connector into BMS port at the bottom of inverter and screw it tightly.

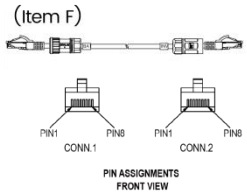

CONN.1 PIN	CONN.2 PIN
1	1
2	2
3	3
4	4
5	5
6	6
7	7
8	8

Note: Default wire harness PIN to PIN

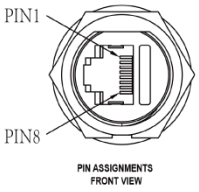

PIN	CONN.2 PIN
1	A-START
2	GND
3	/
4	BMS-CANL
5	BMS-CANH
6	BMS-CANH
7	BMS-CANL
8	/

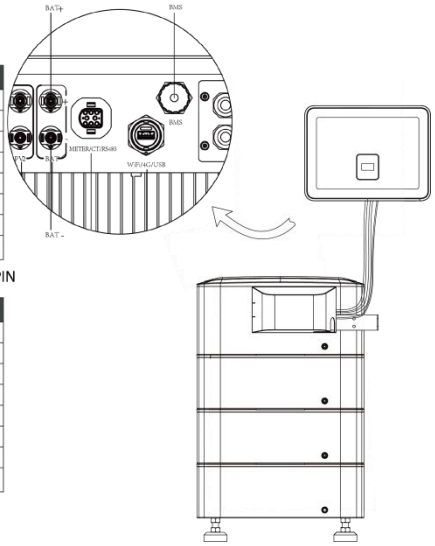

⚠ Danger!

- Ensure no short circuit occurs at the terminals or between terminals and any external device.
- Do not connect the battery directly to inverter conductors or PV conductors. This will damage the battery and may result in explosion.

Note!

Please use the side labeled "+" and "-" to connect to the battery.

Power Cable Installation Procedure		
Step 1	DC- output cable installation.	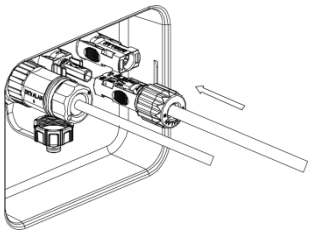
Step 2	DC+ output cable installation.	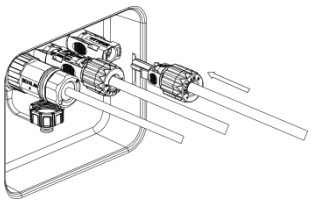
Step 3	DC output cable installation is completed.	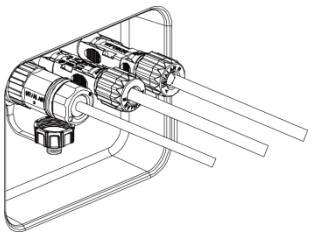

Cable Cover Installation Procedure	
Step 1	First, fit the buckle on the other side into the groove of the box. Then, press the buckle to insert it into the groove of the box.
	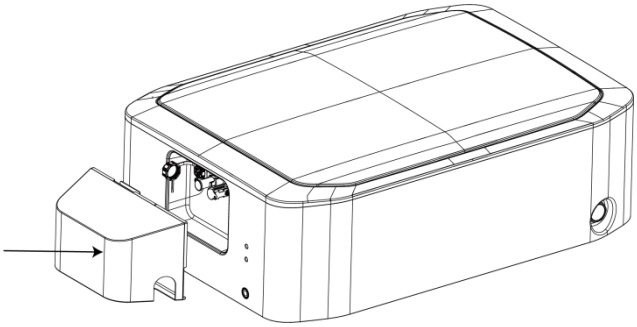
Step 2	Tie the power wire tightly with the cable ties and cut off the excess.
	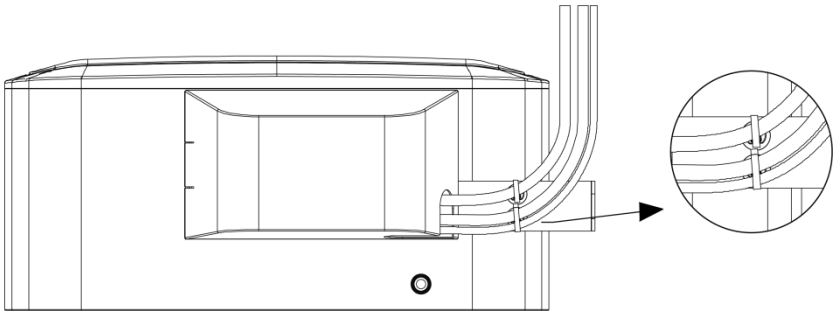

Connect the grounding cable. The figure is shown in below.

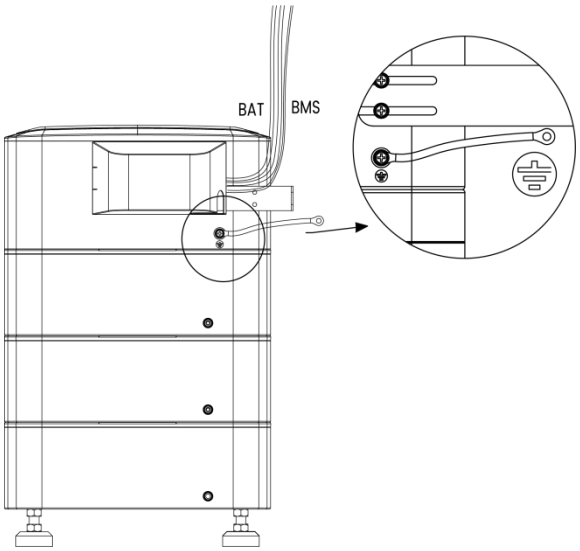

⚠ Warning!

- Please ensure the reliability of the battery ground cable.
- For the DC output cable, connect the end marked "DC+" and "DC-" to the battery, and connect the opposite end marked "BAT+" and "BAT-" to the inverter.
- Do not interchange the positive and negative terminals of the battery.
- Make sure that the power cable connected to the battery is connected vertically and that the vertical length is greater than 30mm. If the cable is bent close to the terminals, it may cause poor line contact and result in burnt terminals.

5.6 Disassembly Steps

Procedures		
Step 1	Shut down the battery system, then disconnect the wiring harness connected to the inverter .	
Step 2	Remove the waterproof cover.	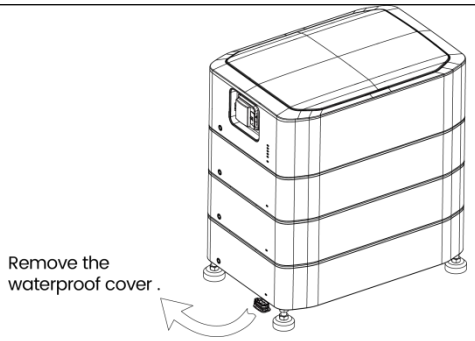
	Note: Operators must wait 1 minute at least after disconnecting or removing the waterproof cover/connector before accessing the module.	
Step 3	Remove the screws.	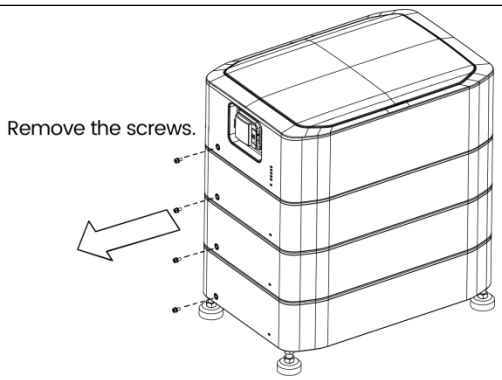
Step 4	Remove the Battery vision top pack 2.1 (4.6 kWh) first, then remove the remaining Battery vision pack 2.1 (4.6 kWh) in sequence. After all modules are removed, store them properly in accordance with the storage requirements.	
	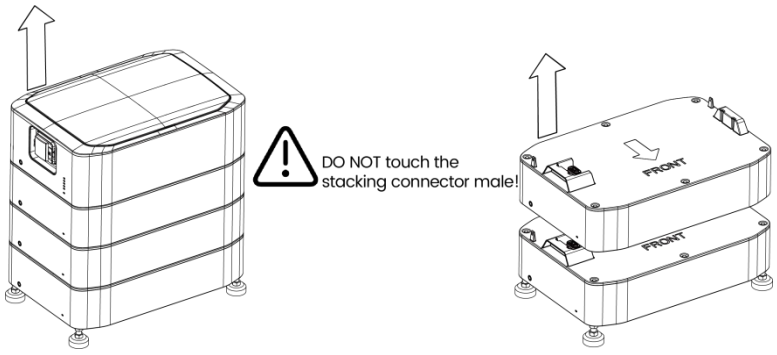	

6 System Operation

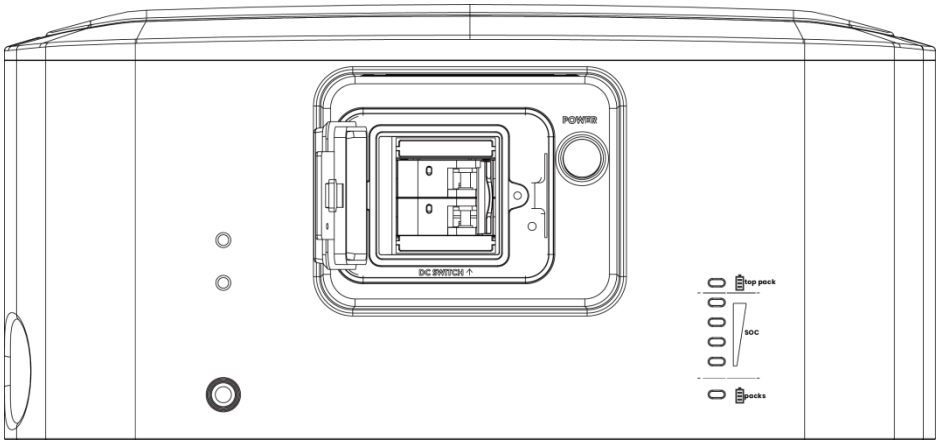

- All installation and operation must comply with local electrical standards.
- Check all power cables and communication cables carefully.

6.1 System Start Up

When the inverter is connected to the PV and the grid and both are operating normally, turn on the battery DC Switch. Press the POWER Switch and hold it for 3 seconds, then release. The Status LED is blinking green and indicates that the system is working normally.

6.2 System Shut Down

Press and hold the POWER Switch for at least 5 seconds until all of the Battery vision top pack 2.1 (4.6 kWh) LEDs (BMS Status LED and SOC LED) begin blinking. Once they start blinking， release the switch. The lights will automatically turn off after 5 seconds. Then, turn off the DC Switch.

6.3 System Black Start

Under special circumstances when both PV and grid power are out of order, the battery can be activated through the "Black Start" function. This means that our energy storage inverter and battery can continue to operate. The startup steps for black start are as follows:

- Turn on the DC switch, press and hold the power button for 3 seconds, then release.
- Press the "POWER" button three times in succession within 4 seconds (Complete within 30 seconds after the battery system starts up).
- The status LED remains solid green, indicating successful activation of black start mode.

⚠ Warning!

Ensure correct battery-inverter connection prior to Black Start. No wiring modifications during black start.

6.4 Monitoring Methods

Once the system has been successfully installed and commissioned, communication between the battery and the inverter is functioning correctly, and the battery can be monitored and controlled by the inverter. End users can view the monitoring page via the APP or the web platform.

Battery System Cable Layout Diagram

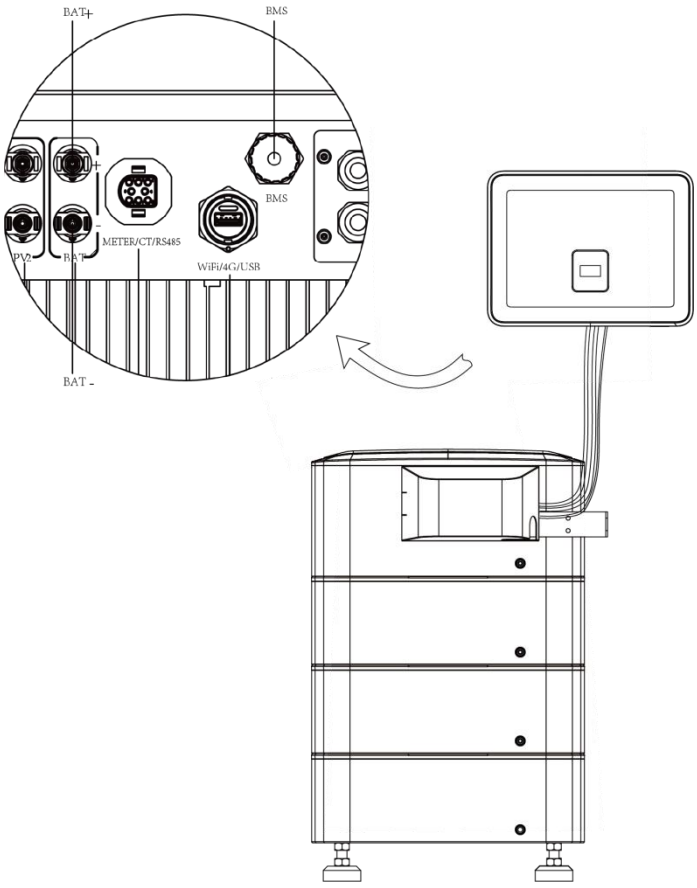

Note!

- Detailed information about the APP and web platform, please refer to the relevant SOLARWATT inverter vision series manual.
- Terminal layout may vary between different inverters; the diagram above is for reference only. The actual wiring should be carried out in accordance with the manual for the specific inverter being used.

7 Maintenance Guide

7.1 Routine Maintenance

Note!

- To ensure long-term accuracy of the state of charge (SOC), it is recommended to perform a full SOC calibration at regular intervals (for example, every two weeks).
- This calibration is completed by charging the battery until the charging power reaches zero, allowing the system to correctly re-align the SOC reference.

⚠ Warning!

- Before performing any cleaning work, disconnect the system from all power sources.
- Clean the housing, cover, and display using a soft, dry cloth only.

To guarantee stable and reliable operation over the system's service life, it is strongly recommended to carry out routine maintenance checks as described in this section.

Check Items	Acceptance Criteria	Maintenance Interval
Battery cleanliness	The battery is free of dust and obstructions, ensuring proper heat dissipation.	Every 6~12 months
Battery visible damage	The battery shows no signs of damage or deformation.	Every 6 months
Battery operating status	1. The battery operates without abnormal noise. 2. All system parameters are correctly configured. This maintenance should be performed while the battery is running.	Every 6 months
Electrical connections	1. All cables are securely connected. 2. Cables are intact; in particular, cable jackets in contact with metallic surfaces show no scratches or damage. 3. Unused cable glands are sealed with rubber plugs and properly secured with pressure caps.	Perform the first inspection 6 months after initial commissioning. Thereafter, every 6~12 months.

7.2 Troubleshooting

When the red / green LED on the panel is flashing or normally on, it does not mean that the Battery vision 2.1 is abnormal, it may be just an alarm or protection. Please check the "Fault Indicators" for the detailed faulty definition before any troubleshooting steps. In general, the alarm indication is normal without manual intervention. When the alarm triggering state is removed, Battery vision 2.1 will automatically return to normal use.

Problem determination based on the following points:

- Check if the red indicator light illuminates once the battery enters operation;
- Whether the buzzer in Battery vision top pack 2.1 (4.6 kWh) on;
- Whether the battery system can be communicated with inverter;
- Whether the battery can be output voltage or not.

Preliminary Determination Steps

Battery system cannot work, when DC switch on and power switch on, the LED doesn't light up or flash, please contact the local distributor.

- The LED display of Battery vision top pack 2.1 (4.6 kWh) and Battery vision pack 2.1 (4.6 kWh) is normal, but it cannot charge and discharge. Observe the display screen of inverter and there is no SOC. Please check whether the CAN communication between Battery vision top pack 2.1 (4.6 kWh) to inverter is well connected. If the connection is good, please replace a CAN communication cable. If the SOC is still not visible on the inverter display screen, please contact the local distributor.
- After the battery system is powered on, if you can see the alarm information on the LED and inverter display screen at the same time, please contact the local distributor.

7.2.1 LED Indicators

The operating status light on the left side of the battery packs shows its working status.

For Battery vision pack 2.1 (4.6 kWh)

Green LED	Red LED	Batteries Status
On for 0.5s, Off for 0.5s	On for 0.5s, Off for 0.5s	Running in Boot
On for 0.1s, Off for 0.1s	On for 0.1s, Off for 0.1s	Upgrading
On for 1s, Off for 1s	Off	Normal Working
Off	On for 1s, Off for 1s	Alarm

For Battery vision top pack 2.1 (4.6 kWh)

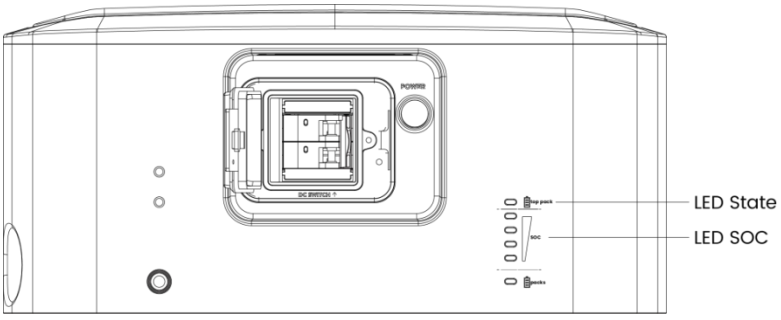

SOC	System Status	LED State	LED SOC			
=100%	Standby	■	●	●	●	●
100% > SOC >= 75%		■	●	●	●	●
75% > SOC >= 50%		■	/	●	●	●
50% > SOC >= 25%		■	/	/	●	●
25% > SOC >= 0%		■	/	/	/	●
=100%	Discharge	●	●	●	●	●
100% > SOC >= 75%		●	●	●	●	●
75% > SOC >= 50%		●	/	●	●	●
50% > SOC >= 25%		●	/	/	●	●
25% > SOC >= 0%		●	/	/	/	●
=100%	Charge	●	■	■	■	■
100% > SOC >= 75%		●	■	■	■	■
75% > SOC >= 50%		●	/	■	■	■
50% > SOC >= 25%		●	/	/	■	■
25% > SOC >= 0%		●	/	/	/	■

7.2.2 Fault Indicators

Fault	LED State	LED SOC			
Under voltage fault	■	/	/	/	●
Over voltage fault	■	/	/	●	/
Over temperature fault	■	/	/	●	●
Under temperature fault	■	/	●	/	/
Discharge over current	■	/	●	/	●
Charge over current	■	/	●	●	/
Warm up film switch adhesion	■	/	●	●	●
Reserve	■	●	/	/	/
Pre-charge failed	■	●	/	/	●
Short circuit Protection	■	●	/	●	/
AFE communication failed	■	●	/	●	●
Module addressing failed	■	●	●	/	/
IVU communication failed	■	●	●	/	●
BMU communication failed	■	●	●	●	/
PCS communication failed	■	●	●	●	●
HVB FUSE fault	●	/	/	/	●
Module FUSE fault	●	/	/	●	/
Module matching fault	●	/	/	●	●

Internal total voltage sampling failed	●	/	●	/	/
Temperature sampling failed	●	/	●	/	●
Relay adhesion	●	/	●	●	/
Relay not close	●	/	●	●	●
Relay drive failed	●	●	/	/	/
Single cell "0V" fault	●	●	/	/	●
Temperature high permanent failed	●	●	/	●	/
The single voltage high permanently failed	●	●	/	●	●
SOH low protection	●	●	●	/	/
AFE failed (UV/OV/UT/OT)	●	●	●	/	●
Shutdown failed	●	●	●	●	/
Other fault	●	●	●	●	●

Remark:

■: LED flash display (on: 0.5s, off: 0.5s)

●: LED on display

7.3 FAQ

7.3.1 Expanded Capacity Requirement

If a battery is replaced or added for capacity expansion, each battery's SOC should be consistent. The max. SOC difference should be between±5%.

If users want to increase their battery system capacity, please ensure that the SOC of the existing system capacity is about 50%. The manufacturer date of the new battery shall not exceed 12 months; in case of exceeding 12 months. please charge the new battery to around 50%.

7.3.2 Storage with Low SOC

After the product is powered off, static power consumption and self-discharge loss may occur in internal modules. Therefore, charge batteries in a timely manner and do not store the product in low SOC. Otherwise, the product may be damaged due to over discharge, and battery modules need to be replaced.

Storage in low SOC may occur in the following scenarios:

- The DC switch on the power control module is OFF.

- The power cables or signal cables are not connected.
- The batteries cannot be charged due to a system fault after discharge.
- The batteries cannot be charged due to incorrect configurations in the system.
- The batteries cannot be charged due to no PV input and long-term mains failure.

Regardless of scenarios, the batteries must be charged within the longest interval corresponding to the SOC when the batteries are powered off. If the batteries are not charged within the specified interval, they may be damaged due to over discharge.

Storage Environment Temperature	Power-off SOC Before Storage	Maximum Charge Interval
0~35℃	0% ≤ SOC < 5%	7 days

Note!

When the battery SOC decreases to 0%, charge the batteries within 7 days. Permanent battery faults caused by delayed charge due to customer reasons are beyond the warranty scope.

7.3.3 Low-Temperature Battery Reserve

To prevent battery drain and potential damage in freezing weather, the system includes an automatic low-temperature protection feature. It proactively manages the battery to maintain adequate charge, extending standby time when temperatures drop.

8 Product Introduction

8.1 Battery vision 2.1 Specifications

8.1.1 Battery vision pack 2.1 (4.6 kWh) Specifications

Specifications for Battery vision pack 2.1 (4.6 kWh)	
Model No.	Battery vision pack 2.1 (4.6 kWh)
Max. charge/discharge current (A)	50
Operating charge/discharge temperature (℃)	0~55/-10~55
Storage temperature (℃)	-10~50
Humidity (%)	0~100
Nominal voltage (V)	64
Nominal capacity (Ah)	72
Usable energy (kWh)	4.6
Battery voltage range (V)	58.0~72.0
Max. Continuous discharge/charge current (A)	50/50
(CC-CV) Standard charging current (A)	50
Constant current and voltage charging cut-off current (A)	2
Depth of discharge(%)	100
Peak discharge current (60s) (A)	65
Altitude (m)	≤2000
Dimensions (W*H*D) (mm)	635*142*436
Weight (kg)	44.0±5%

8.1.2 Battery vision top pack 2.1 (4.6 kWh) Specifications

Specifications for Battery vision top pack 2.1 (4.6 kWh)	
Model No.	Battery vision top pack 2.1 (4.6 kWh)
Max. charge/discharge current (A)	50
Operating charge/discharge temperature (℃)	0~55/-10~55
Storage temperature (℃)	-10~50
Humidity (%)	0~100
Nominal voltage (V)	64
Nominal capacity (Ah)	72
Usable energy (kWh)	4.6
Battery voltage range (V)	58.0~72.0
Max. Continuous discharge/charge current (A)	50/50
(CC-CV) Standard charging current (A)	50
Constant current and voltage charging cut-off current (A)	2
Depth of discharge(%)	100
Peak discharge current (60s) (A)	65
Altitude (m)	≤2000
Dimensions (W*H*D) (mm)	635*203.5*436
Weight (kg)	48.0±5%
Communication interfaces	CAN

8.1.3 Battery System Specifications for Battery vision 2.1

Specifications for Battery vision 2.1					
Model No.	Battery vision two 2.1	Battery vision three 2.1	Battery vision four 2.1	Battery vision five 2.1	Battery vision six 2.1
Technical properties					
Battery designation	IFpP41/149/ 112[(20S)2S] M/-10+50/90	IFpP41/149/ 112[(20S)3S] M/-10+50/90	IFpP41/149/ 112[(20S)4S] M/-10+50/90	IFpP41/149/ 112[(20S)5S] M/-10+50/90	IFpP41/149/ 112[(20S)6S] M/-10+50/90
The number of batteries	1*Battery vision top pack 2.1 (4.6 kWh) + 1*Battery vision pack 2.1 (4.6 kWh)	1*Battery vision top pack 2.1 (4.6 kWh) + 2*Battery vision pack 2.1 (4.6 kWh)	1*Battery vision top pack 2.1 (4.6 kWh) + 3*Battery vision pack 2.1 (4.6 kWh)	1*Battery vision top pack 2.1 (4.6 kWh) + 4*Battery vision pack 2.1 (4.6 kWh)	1*Battery vision top pack 2.1 (4.6 kWh) + 5*Battery vision pack 2.1 (4.6 kWh)
Nominal voltage (V)	128.0	192.0	256.0	320.0	384.0
Nominal capacity (Ah)	72	72	72	72	72
Usable energy (kWh)	9.22	13.82	18.43	23.04	27.65
Battery voltage range (V)	116~144	174~216	232~288	290~360	348~432
Max. charge/discharge current (A)	50/50				
(CC-CV) Standard charging current (A)	50				
Constant current and constant voltage charging cut-off current (A)	2				
Peak discharge Current (60s) (A)	65				
Depth of discharge(%)	100				
Storage temperature (℃)	-10~50				
Operating charge/discharge temperature (℃)	0~55/-10~55				
Cycle life	≥6000 @25℃ @ 70%SOH				
Ingress protection	IP65				
Protective class	Class Ⅰ				
Dimensions (W*H*D) (mm)	635*345.5*436	635*487.5*436	635*629.5*436	635*771.5*436	635*913.5*436
Weight (kg)	92±5%	136±5%	180±5%	224±5%	268±5%
Communication interfaces	CAN				

9 Contact Us

Australian Distributor & Importer: FOX ESS AUSTRALIA PTY LTD (Independent distributor of SOLARWATT-branded products in Australia)

Contact:

- Web: https://www.solarwatt.com.au/
- Sales: sales@solarwatt.com.au
- General: info@solarwatt.com

Brand Owner: SOLARWATT GmbH | Maria-Reiche-Straße 2a, 01109 Dresden, Germany

Date 2026-11

Version V 1.0.0